F-Theta JENar™ Silverline™ Lens
High Power Lens – JENar™ Silverline™ 330-515...540-332

Parameters	JENar™ Silverline™ 330-515...540-332 Fused silica lens for large scan fields
Focal length:	33 mm
Wavelength:	515...540 nm
Scan field (X x Y); Ø:	(235 mm x 235 mm); 332 mm
Diagonal scan angle:	± 27.6°
X/Y mirror angle:	± 9.97°
Back working distance:	216.0 mm
Flange focus distance:	364.4 mm
Input beam Ø 1/e²:	16 mm
Focus size Ø 1/e²:	21.3 µm
a1 | a2:	18.8 mm | 50.0 mm
Telecentricity (only F-Theta | with scanner):	23.5° | 23.5°
Group delay dispersion (GDD):	3919 fs²
LIDT coating pulsed; CW:	2.5 J/cm² * (τ/[ns]) ^ 0.35; 2.5 MW/cm²
LIDT system pulsed; CW:	2.5 J/cm² * (τ/[ns]) ^ 0.35; 2.5 MW/cm²
Weight:	3.359 kg
Order Number:	739819*

*Please note: Order number was changed. Previous one was 663834.

Spot properties

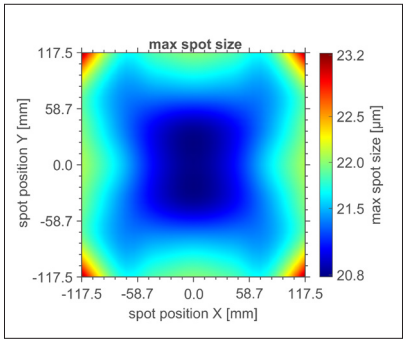

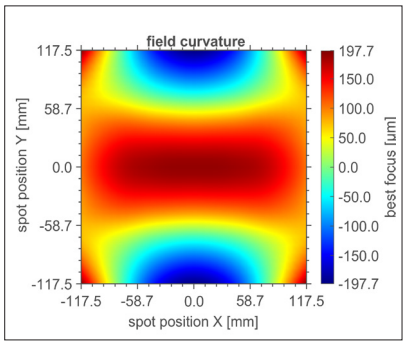

Specifications
JENar™ Silverline™ 330-515...540-332

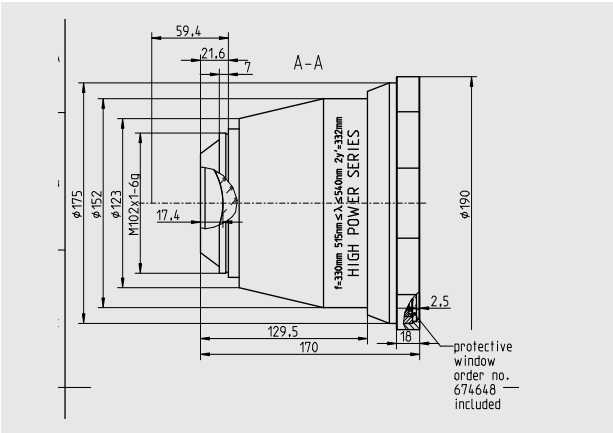

Definition of geometrical parameters

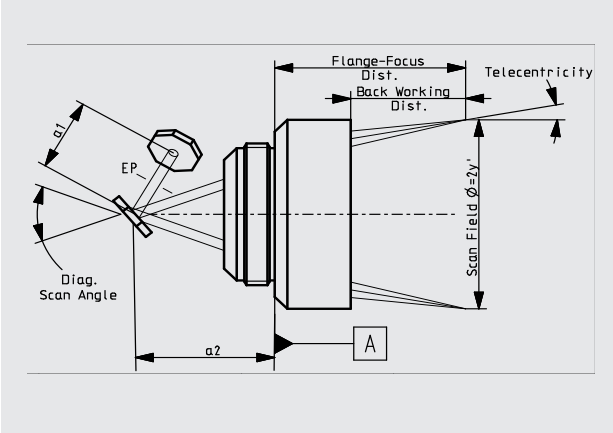

JENar®: Registered in EU, CN, JP, SG, US | Silverline®: Registered in DE, JP, SG, IN

The data given are nominal values for the specified application parameters. Jenoptik provides Zemax® BlackBox files for simulating application results for customized parameters (e.g. wavelength, scanner geometry, beam diameter, ...).
Back working distance, Flange focus distance, and focal length vary by ± 1.5 % due to manufacturing variances.

It is our policy to constantly improve the design and specifications. Accordingly, the details represented herein cannot be regarded as final

JENOPTIK Optical Systems GmbH
Goeschwitzer Strasse 25 · 07745 Jena · Germany
Phone +49 3641 65-3148 · Fax -3677
optics@jenoptik.com · www.jenoptik.com